Thermocouples

Base Metal

Standard Thermocouple with Protection

Straight Type

To order, specify:

Part number-length.
Example: 1409-1308-24

Metal Tube

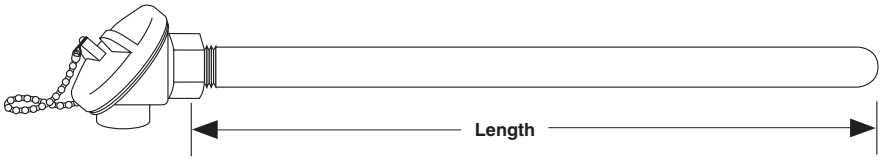

Cast Iron Tube

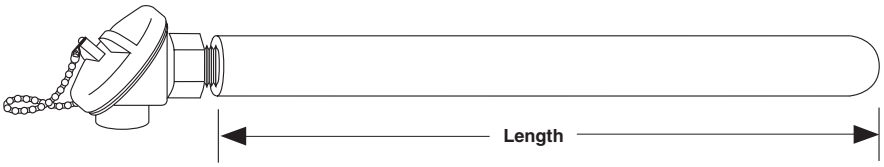

Code Number		AWG Gauge	Protection Tube		Pipe Diameter in.	Construction	Cast Iron Head	Length in.
Type K	Type J		Material	NPT Size in.				
1409-1395	1507-1395	**8**	**Alloy 601**	**½**	**0.840**	**Seamless**	**70900203**	12, 18, 24, 30, 36, 42, 48, 54, 60
1409-1396	1507-1396	8	Alloy 601	¾	1.050	Seamless	70900202	
1409-1341	1507-1341	**8**	**304 SS**	**½**	**0.840**	**Welded**	**70900203**	
1409-1342	1507-1342	8	304 SS	¾	1.050	Welded	70900202	
1409-1307	1507-1307	**8**	**446 SS**	**½**	**0.840**	**Seamless**	**70900203**	
1409-1308	1507-1308	8	446 SS	¾	1.050	Seamless	70900202	
1409-1309	1507-1309	8	446 SS	1	1.315	Seamless	70900201	
1409-1375	1507-1375	8	Cast Iron	¾ int	1.625	Cast	70900202	

Note: Items in **Bolded Green Type** are preferred with shorter lead times.

Thermocouples

Base Metal

Standard Thermocouple with Protection

90 Degree Angle Type

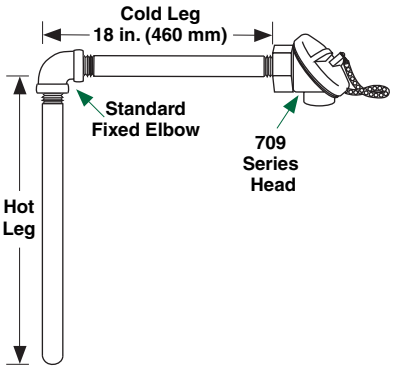

To order, specify:

Part number-cold leg length hot leg length.

Example: 1414-1395-18-24

Standard Thermocouple with Protection — 90 Degree Angle

Code Number		AWG Gauge	Protection Tube (Hot Leg)			Cast Iron Head	Hot Leg Length in.
Type K	Type J		Material	NPT Size in.	Construction		
1414-1307-18	1517-1307-18	**8**	**446 SS**	**½**	**Seamless**	**70900203**	12, 18, 24, 30, 36
1414-1328-18	1517-1328-18	**8**	**Black Steel**	**1**	**Welded**	**70900201**	
1414-1375-18	1517-1375-18	8	Cast Iron	¾ int	Cast	70900202	
1414-1395-18	1517-1395-18	**8**	**Alloy 601**	**½**	**Seamless**	**70900203**	
1415-1307-18	1518-1307-18	14	446 SS	½	Seamless	70900203	
1415-1326-18	1518-1326-18	14	Black Steel	½	Welded	70900203	
1415-1328-18	1518-1328-18	14	Black Steel	1	Welded	70900201	
1415-1375-18	1518-1375-18	14	Cast Iron	¾ int	Cast	70900202	
1415-1395-18	1518-1395-18	14	Alloy 601	½	Seamless	70900203	

Pipe Diameters

Cast iron = 1 ⅝ inch

½ in. NPT = 0.840 inch

¾ in. NPT = 1.050 inch

1 in. NPT = 1.315 inch

Notes: Items in **Bolded Green Type** are preferred with shorter lead times.

Standard cold leg is 18 inches.